BOUDON TUBE PRESSURE GAUGES
WITH CRIMPED-ON RING with or without case filling

DRUCK & TEMPERATUR

Nominal diameter 80
Connection brass or stainless steel
Connection position bottom or back

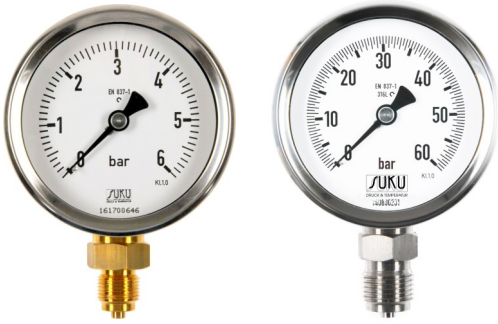

For measuring points with high dynamic pressure loads and vibrations. These pressure gauges can be supplied with housing filling. The glycerine filling ensures that the pointer runs smoothly and has a favorable effect against increased wear.

Type	4882	4883	6200	6201	Options
Type (with filling)			6202	6203	Other case fillings
Nominal diameter	80				
Symbol					Back flange, front flange, u-clamp for panel mounting
Accuracy acc. to DIN EN 837-1	cl. 1,0		cl. 1,0 0...600 and 0...1000 bar cl. 1,6		
Measuring ranges	0...0,6 bar up to 0...600 bar positive and negative overpressure		0...0,6 bar up to 0...1000 bar positive and negative overpressure		
Applications	Constant load: 3/4 x end of scale value Alernating load: 2/3 x end of scale value short term : end of scale value				
Case	Crimped-on ring, polished, stainless steel 1.4301				
Wetted parts	Bronze		Stainless steel 316L (1.4404)		
O-ring sealing	NBR		FPM		
Connection	Brass		Stainless steel 316L (1.4404)		Orifice
Thread	G 1/2 oder 1/4 NPT				M20x1,5, 1/2“NPT, G1/4
Connection position	radial bottom	centric back	radial bottom	centric back	Others on request
Window	Instrument glass		Laminated safety glas		
Movement	Brass / German silver		Stainless steel		
Dial	Aluminium white, scale and letters black				Special scale
Pointer	Aluminium black				
Ambiet temperatures	without case filling: -40°C bis +60°C, with case filling: -20°C bis +60°C				
Medium temperatures	Soft-soldered (≤ 40 bar) max. 60°C Silver brazed (≥ 60 bar) max. 100°C		without case filling: max. 200°C with case filling: max. 80°C		Medium-temp. Filled devices up to 100°C
Degree of protection	Without case filling: IP 54 nach EN 60529/IEC 529 With case filling with closed blow-out plug: IP 65 nach EN 60529/IEC 529				
approx. weight	without case filling: 0,34 kg ; with case filling: 0,50 kg				

Dimensional drawing

Dimensions in mm

DRUCK & TEMPERATUR

Type 4882 and 6200, 6202

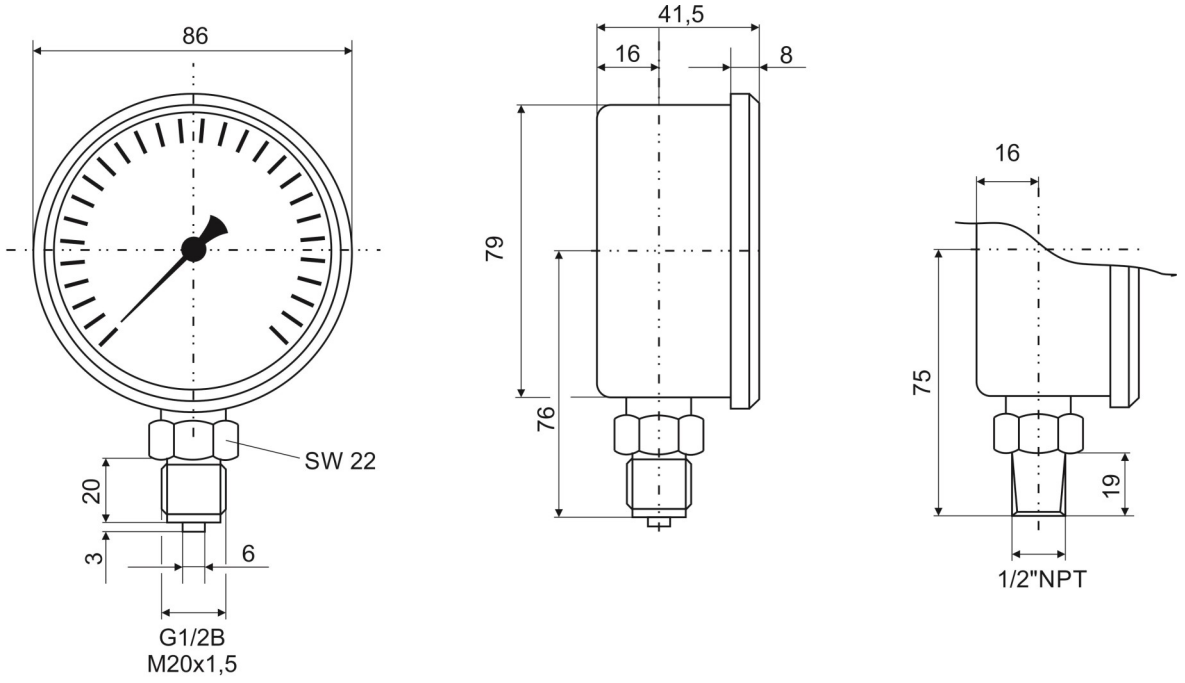

Type 4883 and 6201, 6203

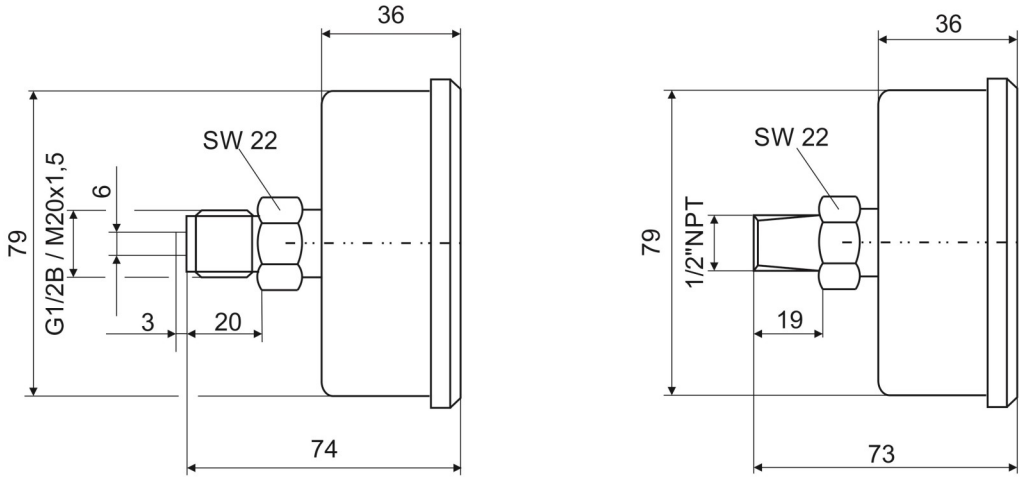

Dimensional drawings - mounting devices

Dimensions in mm

Back flange for surface mounting

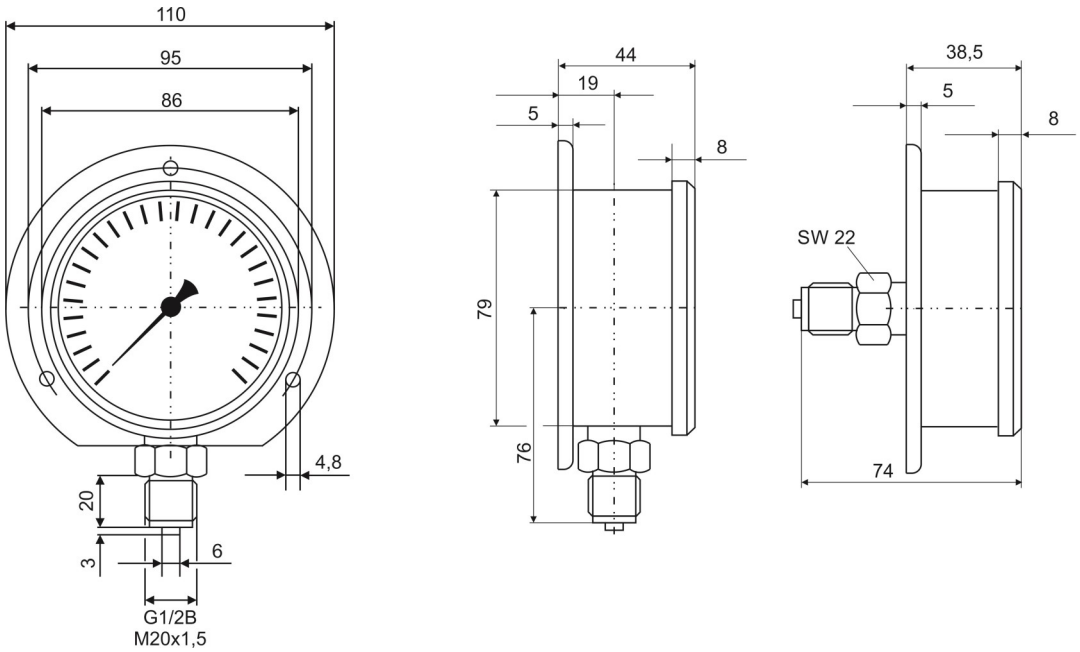

Front flange for panel mounting

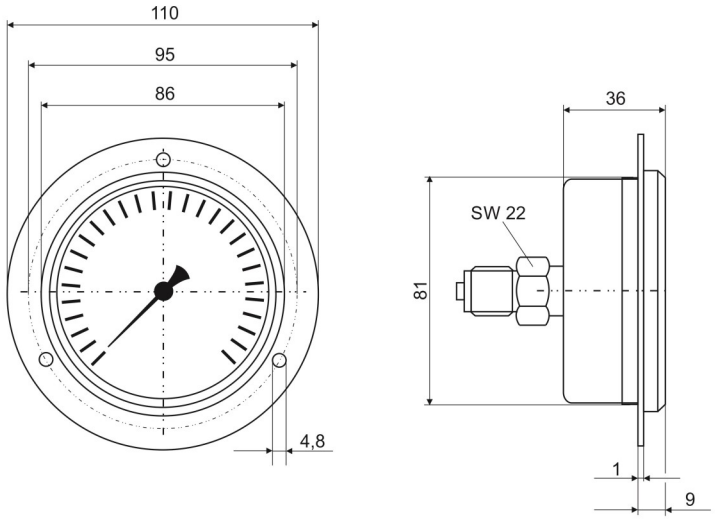

U-clamp for panel mounting

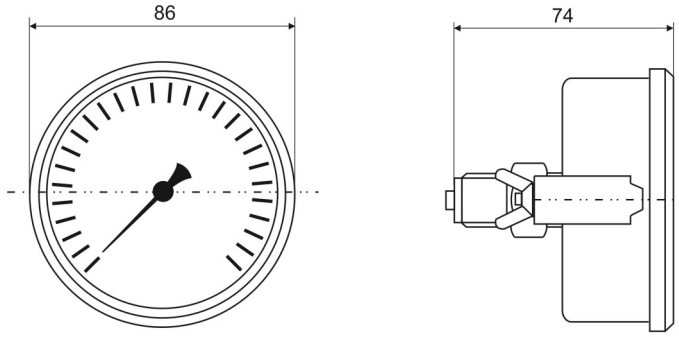

© 2024 SUKU Druck- und Temperaturmesstechnik GmbH.
The specifications given in this document represent the state of engineering at the time of publishing. We reserve the right to make modifications to the specifications and materials.