BOURDON TUBE PRESSURE GAUGES
CASE STAINLESS STEEL

Nominal case size 63
Connection brass
Connection position bottom or back

DRUCK & TEMPERATUR

Bourdon tube pressure gauge with brass connection in a robust crimp ring stainless steel housing, optionally in a bayonet housing; Suitable for gaseous and liquid, not highly viscous and non-crystallizing media that do not attack copper alloys.

Type	**4310**	**4360**	**Options**
Nominal case size	63		
Symbol		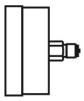	Safety case
Accuracy acc. to DIN EN 837-1	Class 1,6; class 2,5 at 0/600 bar		Class 1,0
Measuring ranges	0/0,6 up to 0/600 bar		Other on request
Case	Crimped-on ring case 1.4301, with blow out		Bayonet case 1.4301
Case filling	without		Fillable, glycerine filling, silicone pil filling
Wetted parts	Bourdon tube made of bronze		Bourdon tube 316L (1.4404)
Connection material	Brass		316L (1.4404)
Connection	G 1/4 B		M12x1,5, 1/4“NPT, others on request
Connection position	bottom	centric back	Other on request
Window	Instrument glass		Safety glass or Polycarbonate
Movement	Brass / German silver		Stainless steel
Dial	Aluminium white, lettering / scale black		Special scale
Pointer	Aluminium black		
Temperatures	Storage: -40°C up to 70°C, ambient: -20°C up to +60°C Medium: up to +60°C		Mediumtemp. Filled devices up to max.70°C, opt. 100°C
Case protection type	IP54; filled devices with closed blow-out IP 65		
Mounting			Back flange or sourface mounting, Front flange, U-clamp for panel mounting (only version with crimped-on ring)
More options			Oxygen use, oil– and greace free, orifice

Crimped-on ring version

Dimensional drawings

Dimensions in mm

Type 4310

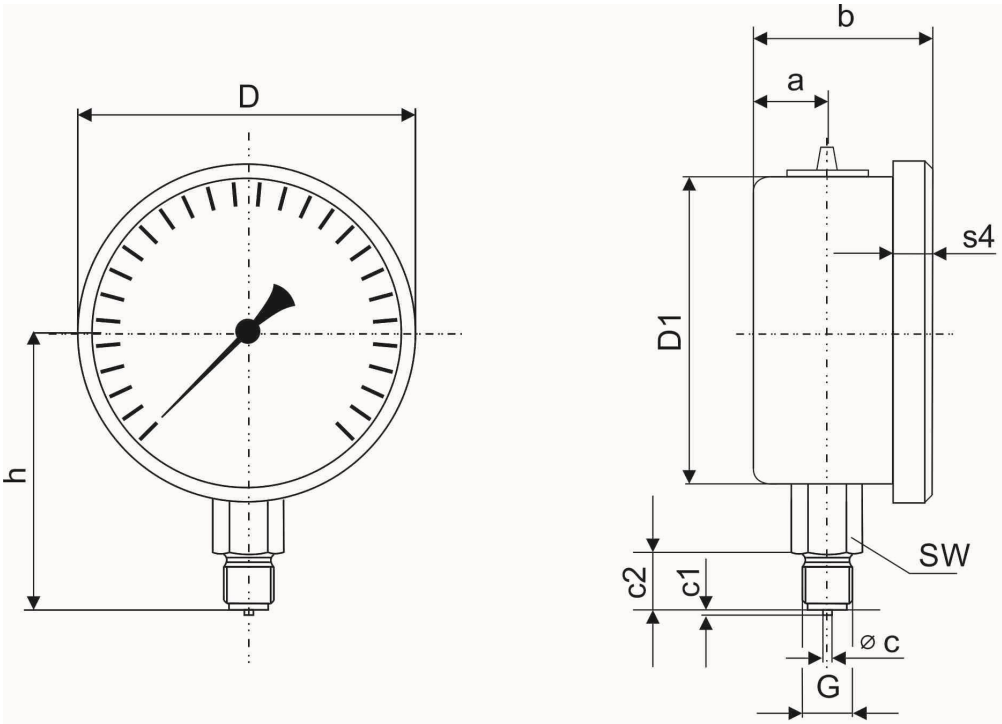

Type 4360

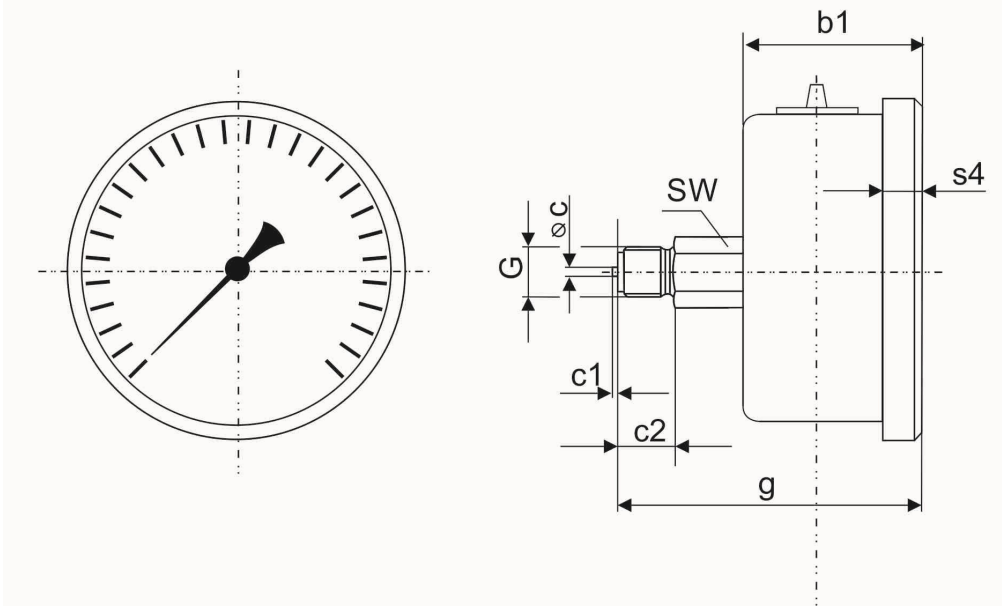

Type	NG	D	D1	h	a	b	b1	c	c1	c2	e	g	s4	G	SW	Weight without filling	Weight with filling
4310	63	67	62	54	10	34	38	5	2	13	-	-	9,5	G¼	14	approx. 0,18 kg	approx. 0,25 kg
4360	63	67	62	-	-	-	-	5	2	13	-	61	9,5	G¼	14	approx. 0,18 kg	approx. 0,25 kg

Version with bayonet ring case

Dimensional drawings

Dimensions in mm

Type 4310

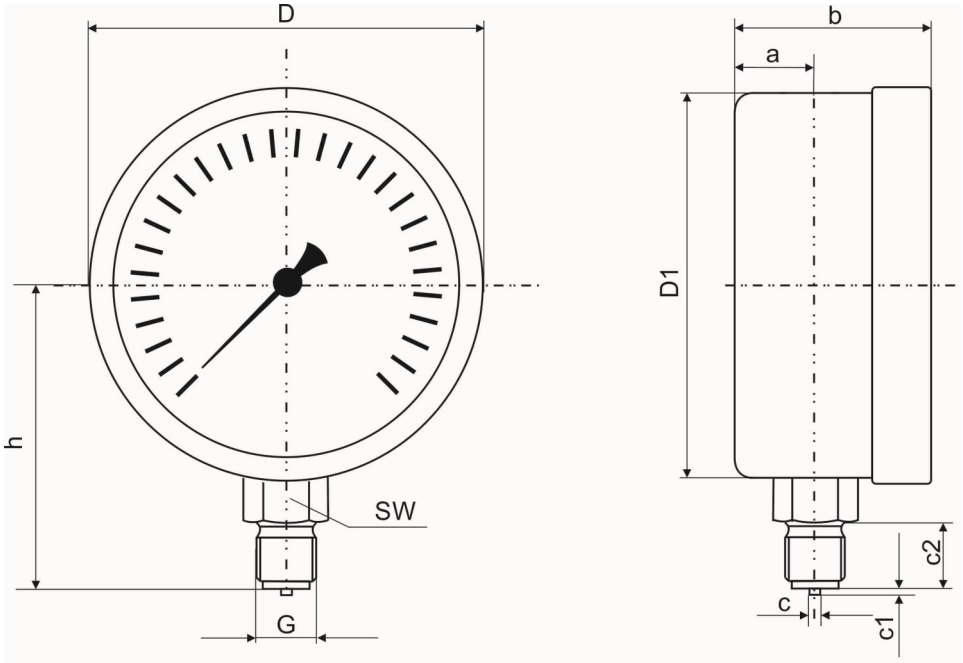

Types 4360

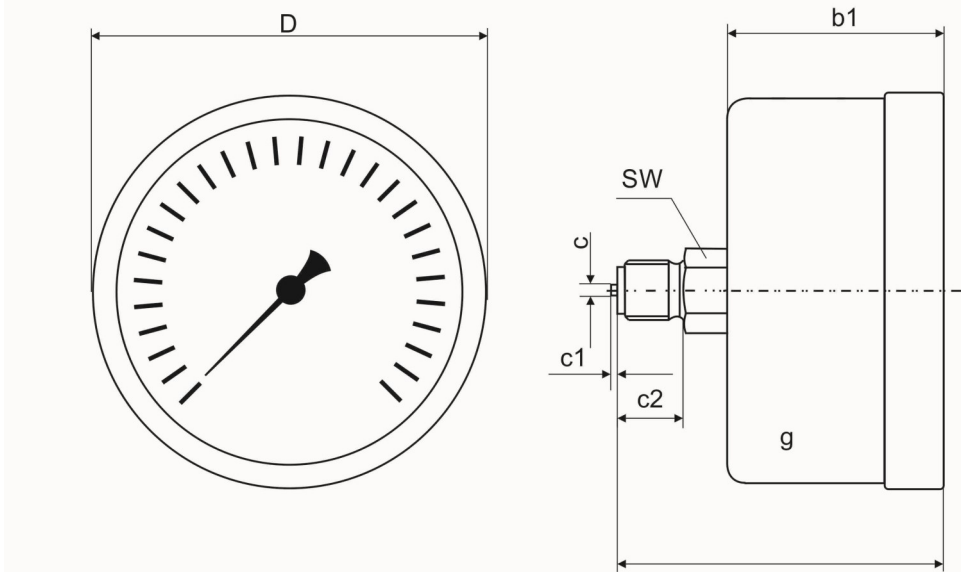

Type	NG	D	D1	h	a	b	b1	c	c1	c2	e	g	G	SW	Weight without filling	Weight with filling
4310	63	64	62	54	10	33	37	5	2	13	-	-	G¼	14	approx. 0,18 kg	approx. 0,25 kg
4360	63	64	62	-	-	-	-	5	2	13	-	59	G¼	14	approx. 0,18 kg	approx. 0,25 kg

Mounting—Crimped-on ring version
Dimensional drawings Dimensions in mm

Back flange

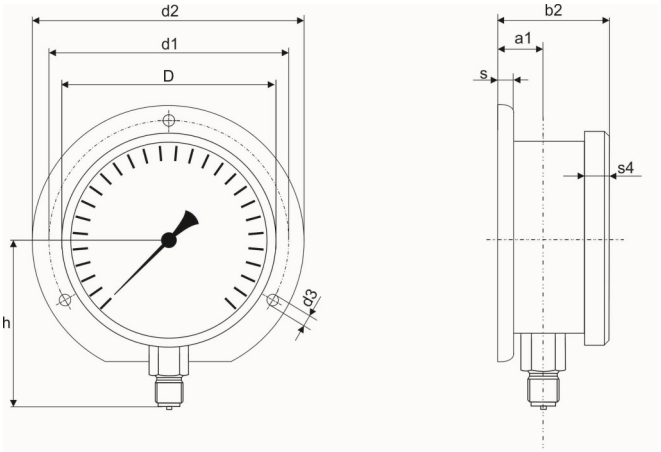

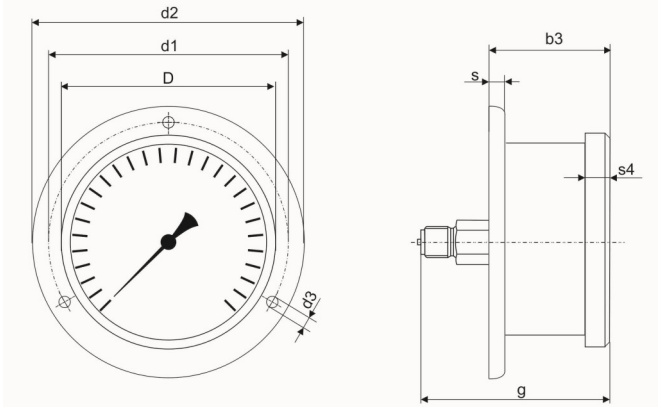

Front flange

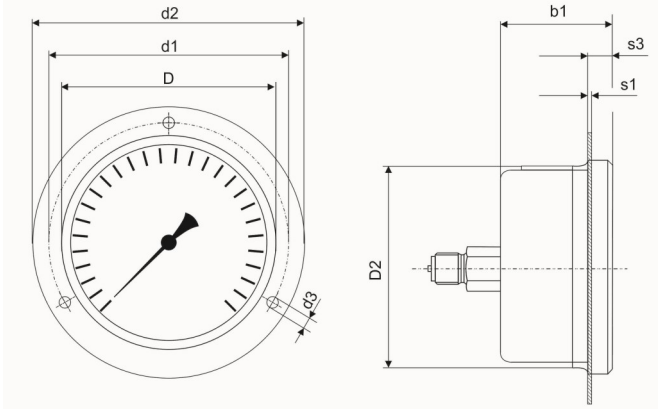

U-Clamp for panel mounting

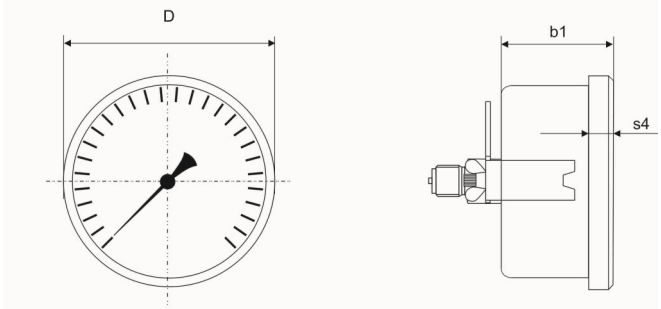

NG	D	D2	d1	d2	d3	a1	b1	b3	s	s1	s3	s4
63	67	64	75	85	3,6	13	38	41	5	1	10,5	9,5

Mounting—bayonet case version
Dimensional drawings Dimensions in mm

Back flange

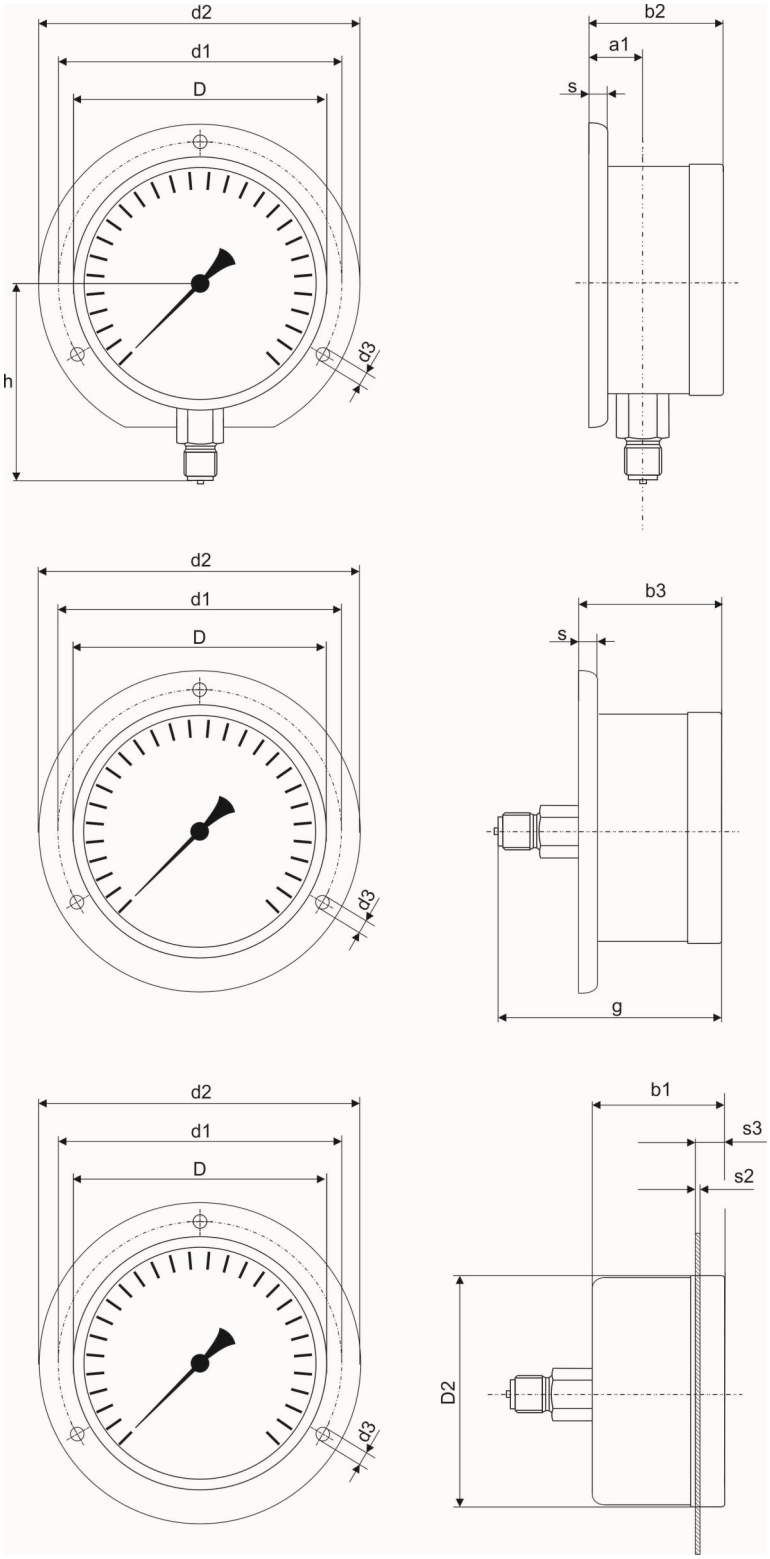

Front flange

NG	D	D2	d1	d2	d3	a1	b1	b3	s	s2	s3
63	64	66	75	85	3,6	13	37	40	5	2	5,5

SUKU Druck- und Temperaturmesstechnik GmbH
Garnsdorfer Hauptstraße 109 • 09244 Lichtenau / Sachsen - GERMANY
Tel.: +49 37208 / 2717 • Fax: +49 37208 / 61713 • contact@suku.de • www.suku.de

© 2023 SUKU Druck- und Temperaturmesstechnik GmbH.
The specifications given in this document represent the state of engineering at the time of publishing. We reserve the right to make modifications to the specifications and materials.