GAS-ACTUATED THERMOMETERS
rigid stem mount, with or without capillary line
Connection position bottom or back

DRUCK & TEMPERATUR

Nominal size 63, 100, 160 and 250
Accuracy class 1

For accurate temperature measurements under robust conditions independent of an energy source. Particularly suitable for use in the chemical industry and petrochemical industry.

Type	31		32		33		34		Options
Nominal size	100	160	100	160	100	160	100	160	NS 63, NS 250
									with link
Version	rigid mount with neck tube				with capillary line				
Connection position	radial bottom		centric back		radial bottom		centric back		others on request Type 31 right-angled or obtuse-angled to the back, lateral to the left or to the right
Accuracy	Class 1								
Temperature ranges °C	0/80, 0/100, 0/120, 0/160, 0/200, 0/250, 0/300, 0/400, 0/500, 0/600 -100/+100, -50/+50, -40/+40, -40/+60, -30/+50, -20/+60, -20/+80 50/300, 50/400, 100/500 (Ranges - temperature difference 80K up to 600K)								other on request
Measuring system	with nitrogen filling (inert gas, physiologically harmless)								
Temperarure sensor	CrNi-Stahl 1.4571, max. stat. pressure 25 bar								
Stem types	G1 Without screw fitting, plain stem G3 Union nut G4 Male thread, turnable G4.1 Male thread, rigid G5 Male thread, compression fitting G6 Male thread, turnable, double male adapter								Special stem types for food industry, contact sensor see pages 5 and 6
Stem Ø	8, 10 or 12 mm								
Case	Bayonet case , 1.4301								Crimped on ring
Case filling	without								with silicone oil (not NG 250)
Movement	Brass, German silver								Stainless steel
Pointer	Aluminium black								
Dial	Aluminium white, scale and lettering black								
Window	Instrument glass								
Adjustment	External adjustment for pointer (±6%)								
Protection	IP65 (DIN EN 60 529/IEC 529)								
Mounting			without or back flange		back flange or surface mounting, gauge holder		back flange or surface mounting		Bracket ounting type 32/34 with filling

Dimensional drawing Dimensions in mm

SUKU
DRUCK & TEMPERATUR

Type 31

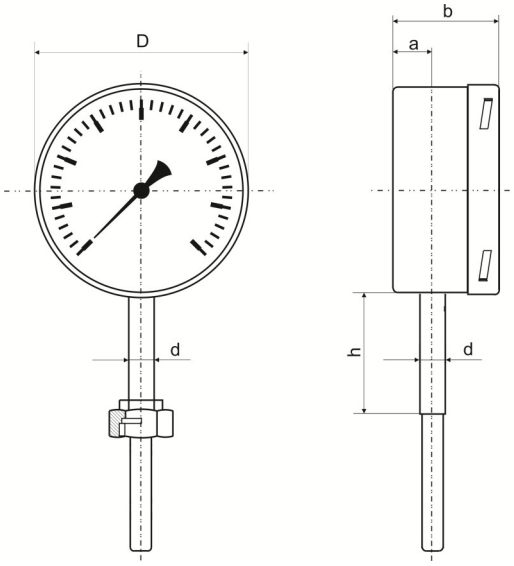

Type 32

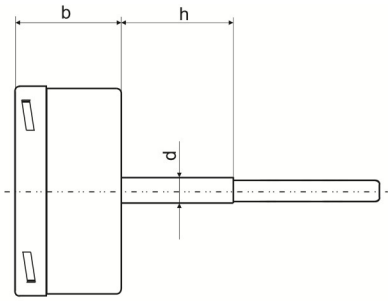

Type 33

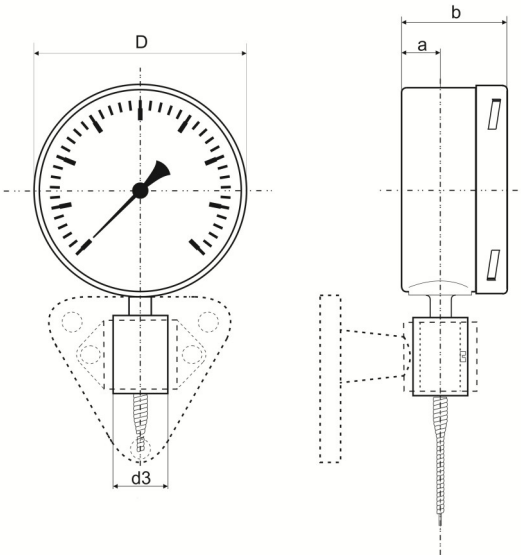

Type 34

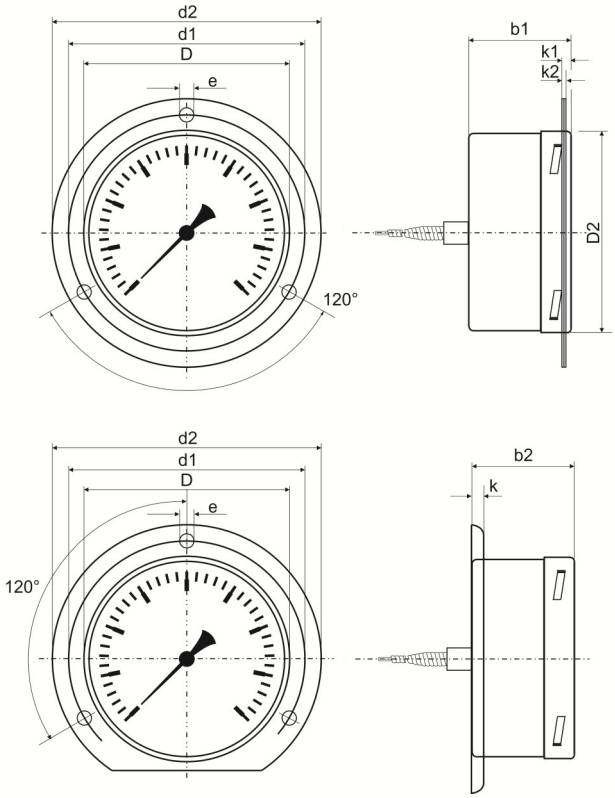

Type	NS	D	a	b	d	d1	d2	d3	b1	b2	h	k	k1	k2	e	Weight approx. (without filling)	Weight approx. (with filling)
31	100	101	15	50	12	-	-	-	-	-	60	-	-	-	-	0,46 kg	0,72 kg
31	160	161	15	50	12	-	-	-	-	-	60	-	-	-	-	0,78 kg	1,50 kg
32	100	101	-	50	12	-	-	-	-	-	60	-	-	-	-	0,46 kg	0,72 kg
32	160	161	-	50	12	-	-	-	-	-	60	-	-	-	-	0,78 kg	1,50 kg
33	100	101	18,5	50	-	116	132	26	-	-	-	-	-	-	-	0,60 kg	0,85 kg
33	160	161	18	50	-	178	196	26	-	-	-	-	-	-	-	0,92 kg	1,60 kg
34	100	101	-	50	-	116	132	-	50	53,5	-	6	5,5	6	4,8	0,60 kg	0,85 kg
34	160	161	-	50	-	178	196	-	50	53	-	6	6	6	5,8	0,92 kg	1,60 kg

Stem types Dimensions in mm

Type	Process connection	Form acc. DIN 13190	Thread - Dimensions	Suitable thermowell models
G1	Without screw fitting, plain stem	Form 1		

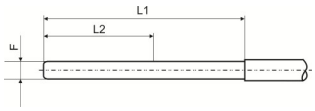

G3 Union nut — Form 5

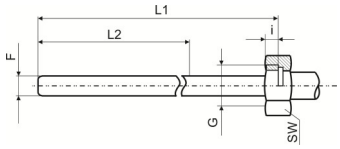

G	SW	i
G1/2	27	10
G3/4	32	12
M20 x1,5	27	10
M24 x1,5	32	12
M27 x 2	32	12

Form 4.1
Form 4.1F
Form 8
Form 9

G4 Male thread turnable — Form 4

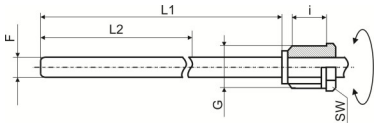

G	SW	i
G1/2B	22	20
G3/4B	27	23
M18x1,5	22	14
M20x1,5	22	20

Form 4
Form 4F
Form 5
Form 6 und 7

G4.1 Male thread riged — Form 6, Form 7

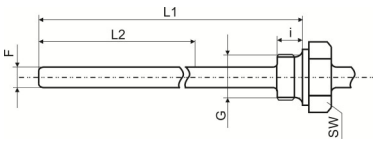

G	SW	i
G1/2B	27	14
G3/4B	32	16
1/2“NPT	27	19
3/4“NPT	27	19
M18x1,5	24	14
M20x1,5	27	14

Form 4
Form 4F
Form 5
Form 6 und 7

G5 Male thread — Form 2
Compression fitting — Form 3

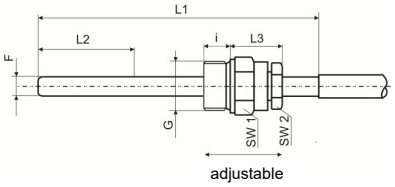

G	SW1	SW2	i
G1/2B	27	22	14
G3/4B	32	22	16
1/2“NPT	27	22	19
3/4“NPT	27	22	19
M20x1,5	27	22	14

Form 4
Form 4F
Form 5
Form 6 und 7

G6 Male thread turnable / double male adapter — -, Lv = 28 mm

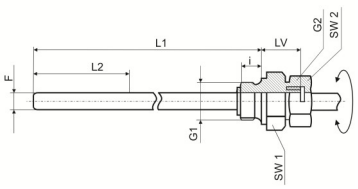

G	G2	SW1	SW2	a
G1/2B	G1/2B	27	27	14
G3/4B	G1/2B	32	27	16
1/2“NPT	G1/2B	27	27	19
3/4“NPT	G1/2B	27	27	19
M20x1,5	M20x1,5	27	27	14
M24x1,5	M20x1,5	32	27	14
M27x1,5	M20x1,5	32	27	16

Form 4
Form 4F
Form 5
Form 6 und 7

Minimum stem length, active length and maximum feasible stem length (mm)

Type 31 and Type 32

			≤ 500°C			> 500°C		
			Stem-Ø dF			Stem-Ø dF		
Stem type	**Length**	**Thread**	**12**	**10**	**8**	**12**	**10**	**8**
alle Typen	La	all standard threads	35	45	75	75	105	165
G1/G3/G4	Lmin	all standard threads	55	65	95	95	125	185
G4.1	Lmin	G1/2B, M18x1,5, M20x1,5	49	59	89	89	119	179
		G3/4B	51	61	91	91	121	181
		1/2“NPT, 3/4“NPT	54	64	94	94	124	184
G5	Lmin	all standard threads	90	100	130	130	160	220
G6	L1min	G1/2B, M20x1,5	49	59	89	89	119	179
		G3/4B, M24x1,5, M27x2	51	61	91	91	121	181
		1/2“NPT, 3/4“NPT	54	64	94	94	124	184
other on request								

Minimum stem length, active length and maximum realisable capillary line length incl. stem (mm)

Type 33 and Type 34

			Capillary line incl. stem up to 5m						Capillary line incl. stem >5m up to 15 m					
			≤ 500°C			> 500°C			≤ 500°C			> 500°C		
			Stem-Ø dF			Stem-Ø dF			Stem-Ø dF			Stem-Ø dF		
Stem type	**Length**	**Thread**	**12**	**10**	**8**	**12**	**10**	**8**	**12**	**10**	**8**	**12**	**10**	**8**
all types	La	all standard threads	35	45	75	75	105	165	53	80	115	150	200	320
G1/G3/G4	Lmin	all standard threads	55	65	95	95	125	185	73	100	135	170	220	340
G5	Lmin	all standard threads	90	100	130	130	160	220	108	135	170	205	255	375
G6	L1min	G1/2B, M20x1,5	49	59	89	89	119	179	69	96	131	166	216	336
		G3/4B, M24x1,5, M27x2	51	61	91	91	121	181	72	99	134	169	219	339
		1/2“NPT, 3/4“NPT	54	64	94	94	124	184	67	94	129	164	214	334

The **minimum length Lmin/L1min** is the smallest feasible stem length.

The active length La is the temperature-sensitive part of the stem.

The **maximum feasible stem length** is 2,50 m.
With a capillary line, greater length are possible.

Special stems Dimensions in mm

Process connections for food / bio/ / pharmaceutical industries

For medium temperatures up to 400°C

SUKU DRUCK & TEMPERATUR

Stem type	**G20.1**
Process connection	Clamp
Standard: ISO 2852 for tubes acc. to ISO 2037 and BS 4825	
dF	10,12 mm
d6	12 mm
Length h	35 mm
Order length	L

DN	D	PN1)
12	34	25
12,7		
17,2		
21,3		
25	50,5	
33,7		
38		
40	64	
51		

Stem type	**G20.11**
Process connection	
Standard: DIN 32676, series A, for tubes acc. to DIN 11850	
dF	10,12 mm
d6	12 mm
Length h	35 mm
Order length	L

DN	D	PN1)
15	34	25
20		
25	50,5	
32		
40		
50	64	

Stem type	**G20.12**
Process connection	Tri-Clamp
Standard: for tubes acc. to BS 4825 and O.D.-Tube, ASME BPE and ISO 1127	
dF	10,12 mm
d6	12 mm
Length h	35 mm
Order length	L

DN	D	PN1)
3/4“	25,4	25
1“	50,5	
1 1/2“		
2“	64	

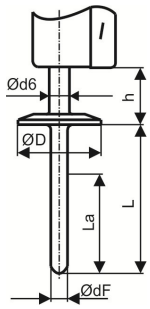

Stem type	**G20.3**
Process connection	Conical coupling/ groove nut
Standard: DIN 11851	
dF	10,12 mm
d6	12 mm
Length h	45 mm
Order length	L

DN	D	PN1)
20	54	25
25	63	
32	70	
40	78	
50	92	

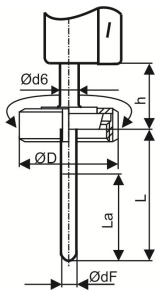

Stem type	**G20.6**
Process connection	Varivent®
Standard: Varinline® case	
dF	16 mm
d6	18 mm
Length h	52 mm
Order length	L

Type / Process bore	D	PN1)
F / 50	66	25
N / 68	84	

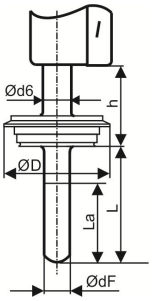

1) PN is defined by stem (not by process connection)

Stem length and active length (mm)

Stem type	**Length (L)**	**Active length (La)**
G20.1, G20.11, G20.12, G20.3	40 up to 200 mm	for L=40 up to 80 mm: La=L for L=81 up to 200 mm: La=80 mm
G20.6	30 up to 200 mm	for L=30 up to 60 mm: La=L for L=61 up to 200 mm: La=60 mm

Special stems Dimensions in mm

Contact stem

for temperature measurement at the outsides of the tanks and pipe barrels up to 300°C

for thermometers with rigid mount to stem or for thermometers with max. 5 m capillary line

Material: 1.4571

Stem type G1.1 (plain)

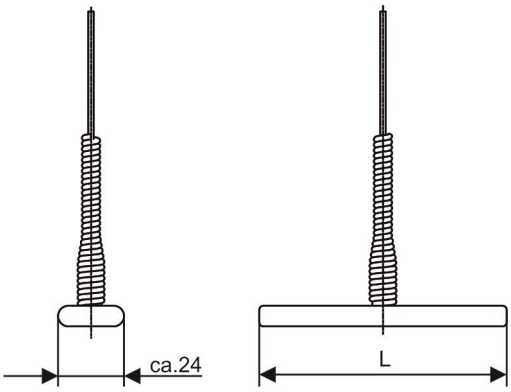

Stem type G1.2 (convex)

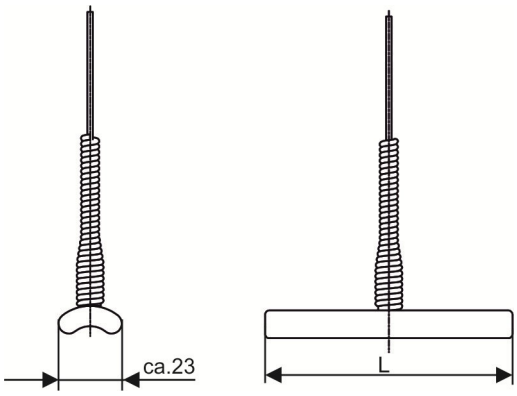

Dimensions in mm L=Stem length

SUKU Druck- und Temperaturmesstechnik GmbH
Garnsdorfer Hauptstraße 109 • 09244 Lichtenau / Sachsen - GERMANY
Tel.: +49 37208 / 2717 • Fax: +49 37208 / 61713 • contact@suku.de • www.suku.de

© 2024 SUKU Druck- und Temperaturmesstechnik GmbH.
The technical data of the devices described in this document correspond to the current state of the art. We reserve the right to make changes and exchange materials.